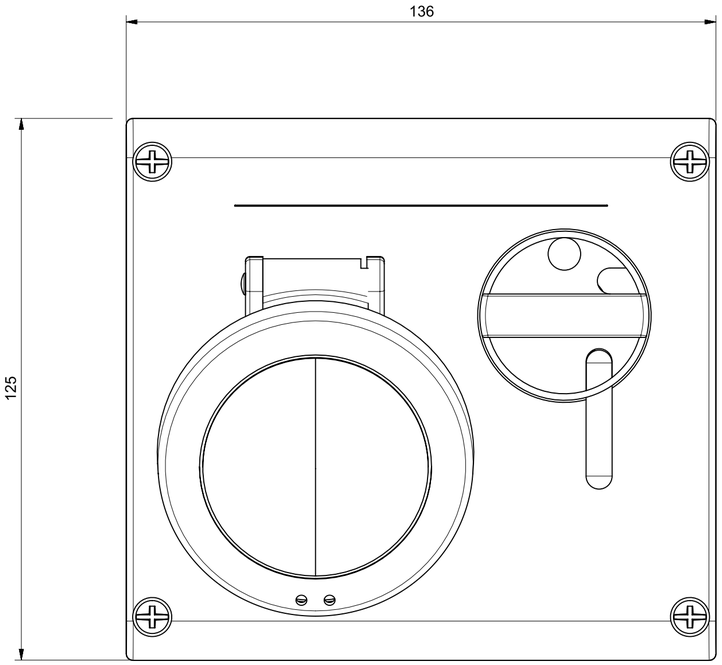

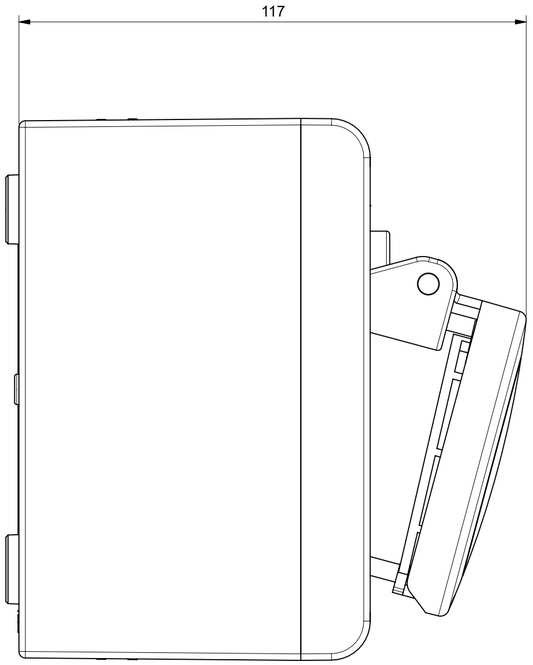

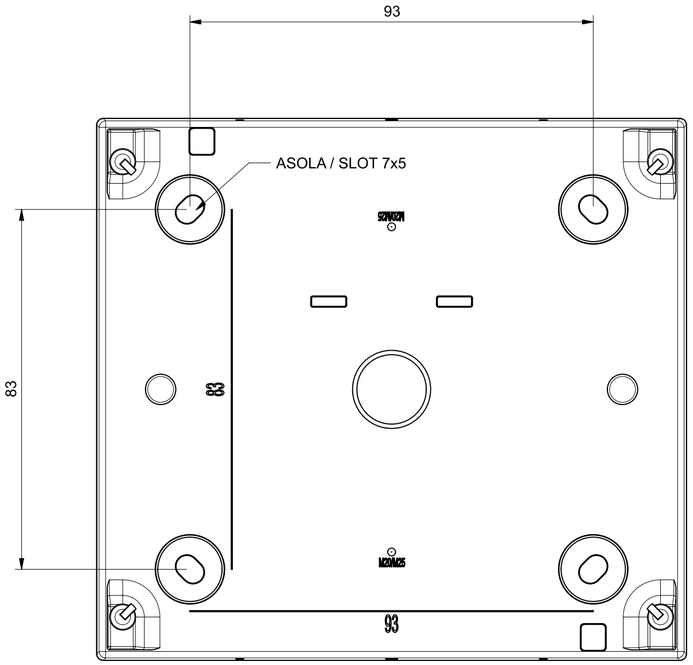

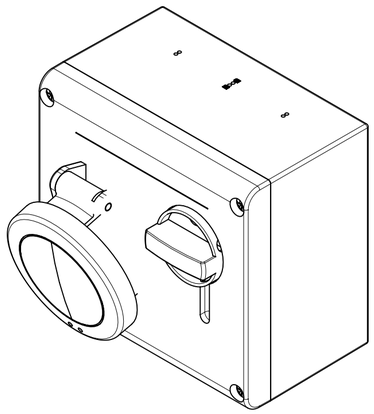

At the end of the law, we reserve the ownership of this design may not be copied and transfer it to third parties or competitors	Format	A2	Scale	1:1	Mould N°		Drawn	SCAME
	Tolerances for linear and angular dimensions without indication of specific tolerances: JS13 / UNI 286-1:2010						Date	
							Approved	
SCAME S.p.A. PARRE - (Bergamo)	DESCRIPTION PRESA PARETE OMNIA 3P+T16A IP44						CODICE 4003048	Sheet 1 / 1